SNS COLLEGE OF TECHNOLOGY

Coimbatore-35
An Autonomous Institution

Accredited by NBA – AICTE and Accredited by NAAC – UGC with 'A+' Grade
Approved by AICTE, New Delhi & Affiliated to Anna University, Chennai

DEPARTMENT OF ELECTRONICS & COMMUNICATION ENGINEERING

19ECB211 – Microcontroller Programming & Interfacing

II YEAR/ IV SEMESTER

UNIT 4 – INTERFACING WITH PIC MICROCONTROLLER

TOPIC 2 – Keyboard Interfacing

Keyboard Interfacing

- A **keypad** is a set of buttons arranged in a block or “pad” which usually bear digits, symbols and usually a complete set of alphabetical letters. If it mostly contains numbers then it can also be called a **numeric keypad.** Here we are using **4 X 4 matrix keypad**

Interfacing keypad

How to interface the 4 X 4 matrix keypad to two ports in microcontroller.?

The rows are connected to an output port and the columns are connected to an input port.

Interfacing keypad to Microcontroller

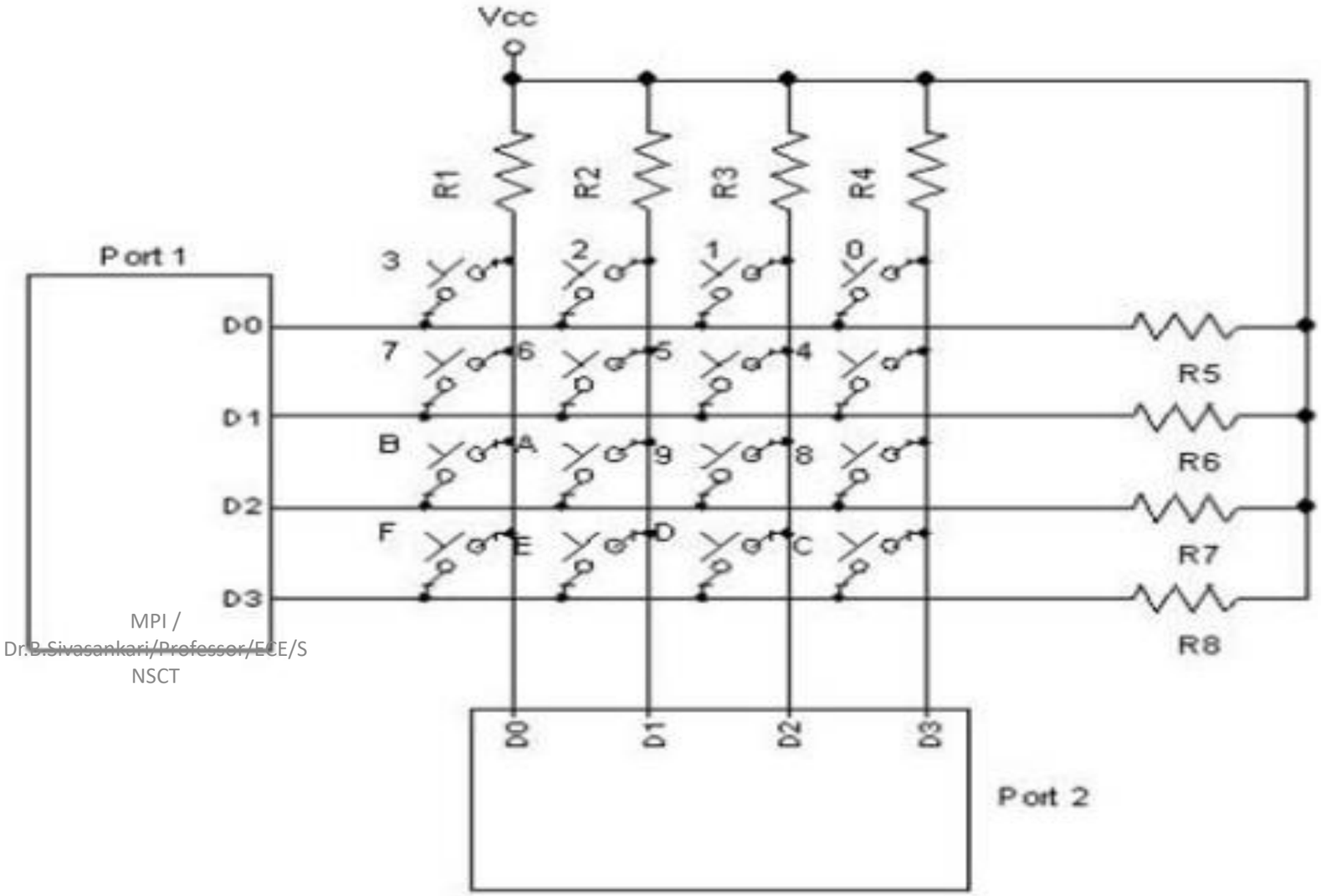

MPI /
Dr.B.Sivasankari/Professor/ECE/S
NSCT

Keyboard Interfacing

➢To detect a pressed key, the microcontroller grounds all rows by providing 0 to the output latch, and then it reads the columns

➢If the data read from the columns is D3-D0=1111, no key has been pressed and the process continues until a key press is detected. However, if one of the column bits has a zero, this means that a key press has occurred

➢For example, if D3-D0=1101, this means that a key in the D1 column has been pressed

MRK
Dr.B.Sivasankari/Professor/ECE/SNSCT

➢After a key press is detected, the microcontroller will go through the process of identifying the key. Starting with the top row, the microcontroller grounds it by providing a low to row D0 only; then it reads the columns.

Keyboard Interfacing

- If the data read is all 1s, no key in that row is activated and the process is moved to the next row. It grounds the next row, reads the columns, and checks for any zero. This process continues until the row is identified
- After identification of the row in which the key has been pressed, the next task is to find out which column the pressed key belongs to

Interfacing keypad with PIC16F877A

- We now want to scan a keypad in **PIC16F/18F Advanced Development** .In case of 4X4 matrix Keypad both the ends of switches are connected to the port pin i.e. four rows and four columns
- So in all sixteen switches have been interfaced using just eight lines.

1Keypads arranged by matrix format, each row and column section pulled by high or low by selection J15, all row lines(PORTB.0 – PORTB.3) and column lines(PORTB.4 to PORTB.7) connected directly by the port pins.

MPI / Dr.B.Sivasankari/Professor/ECE/SNSCT

THANK YOU